SUBMITTAL TRANSMITTAL

CONTRACTOR'S REVIEW STAMP

DENCO CONSTRUCTION SPECIALISTS
SHOP DRAWING AND SUBMITTAL REVIEW

JOB NO. DPA-092216

DATE 10-29-18

REVIEWER Shawnee Hallmark

Corrections or comments made relative to submittals during this review do not relieve the subcontractor from compliance with the requirements of the drawings and specifications. This check is only for review of general conformance with the design concept of the project and general compliance with the information given in the contract documents. The subcontractor is responsible for conforming and correlating all quantities and dimensions, selecting fabrication processes and techniques of construction, coordinating his work with that of other trades and performing his work in a safe and satisfactory manner.

THIS REVIEW DOES NOT INDICATE NOR IMPLY ANY APPROVAL OF CHANGES TO TIME OR CHANGES IN COSTS

A/E REVIEW STAMP

A – No Exceptions

SUBMITTAL REVIEW

PERKINS + WILL

See Submittal Transmittal for important qualifications and limitations.

Project No.: 146054.000

Submittal ID: 09 20 00–001

Reviewed By: Tori Wickard

Date: 11/10/2018

SUBMITTAL DATA

Project Dallas Park & Rec Dept Admin Offices Location 10031 E. Northwest Highway Dallas, TX 75238

General Contractor DENCO CONSTRUCTION SPECIALISTS

Trade Finishes

Items Submitted Non-Structural Metal Framing

Supplier OAC Construction Phone 469-438-7746

Substitutions and Deviations _____

Remarks _____

I CERTIFY THAT THE ABOVE ITEM DESCRIBED IN THE ATTACHED SUBMITTAL COMPLIES WITH THE CONTRACT DOCUMENTS EXCEPT AS NOTED ABOVE.

Shawnee Hallmark	972-226-2609 ext. 108	10-29-18
NAME (TRADE)	PHONE NO.	DATE

Review Comments: _____

Structural (C955)

- Coating Requirement for Structural Framing as Listed in ASTM C 955

C 955 – 06

TABLE 1 Coating Designations

Coating Classification	Coating Designator	Minimum Coating Requirements			
		Zinc-Coated[A]	Zinc Iron[B]	55 % Al-Zinc[C]	Zinc-5 %[D]
Metallic Coated	CP 40	G 40	A 40	AZ 50	GF 30
	CP 60	G 60	A 60	AZ 50	GF 30
	CP 90	G 90	Not Applicable	AZ 50	GF 45
Painted Metallic	PM	The metallic coated substrate shall meet the requirements of metallic coated. In addition, the paint film shall have a minimum thickness of 0.5 mil per side (primer plus topcoat) with a minimum primer thickness of 0.1 mil per side.[E]			
Painted	PTD	Non-metallic coated substrate shall be painted after roll forming and shall have a minimum paint thickness of 1.0 mil on all surfaces including edges. Use of painted product is limited to environments where the rate of corrosion is low; typically areas such as interiors of buildings and areas of low rainfall and low humidity as defined by ISO 9223, Category 1 and 2.[E,F]			

[A] Zinc-coated steel sheet as described in Specification A 653/A 653M.
[B] Zinc-iron alloy-coated steel sheet as described in Specification A 653/A 653M.
[C] 55 % Aluminum-zinc alloy-coated steel sheet as described in Specification A 792/A 792M.
[D] Zinc-5 % aluminum alloy-coated steel sheet as described in Specification A 875/A 875M.
[E] In accordance with the requirements of Specification A 1003/A 1003M.
[F] ISO 9223.

Product Submittal Sheet

ClarkDietrich BUILDING SYSTEMS

Tech Support: 888-437-3244
Engineering Services: 877-832-3206

Sales: 800-543-7140
clarkdietrich.com

Product category: ProSTUD® 20 LTD Drywall Stud
Product name: **362PDS125-19 65ksi G40 - Punched**
3-5/8" ProSTUD 20 LTD (19mil)
Coating: G40
Color coding: Brown

09.22.16 (Non-Structural Metal Framing)

* Embossments in web are only placed on sections 2-1/2" and wider.

Geometric Properties

Web depth	3.625 in	Weight	0.448 lb/ft
Flange width	1.250 in	Punchout width	1.500 in
Stiffening lip	0.315 in	Punchout length	2.500 in
Design thickness	0.0200 in	Minimum thickness	0.0190 in
Yield stress, Fy	65 ksi		

Gross Section Properties of Full Section, Strong Axis

Cross sectional area (A)	0.132 in^2
Moment of inertia (Ix)	0.266 in^4
Radius of gyration (Rx)	1.420 in
Gross moment of inertia (Iy)	0.027 in^4
Gross radius of gyration (Ry)	0.454 in

Effective Section Properties, Strong Axis

Effective area (Ae)	0.048 in^2
Moment of inertia for deflection (Ixe)	0.254 in^4
Section modulus (Sxe)	0.080 in^3
Allowable bending moment (Ma)	3,103 in-lbs
Allowable shear force in web (Unpunched) (Vag)	203 lb
Allowable shear force in web (Punched) (Vanet)	189 lb

Torsional Properties

St. Venant torsion constant (J x 1000)	0.0176 in^4
Warping constant (Cw)	0.072 in^6
Distance from shear center to neutral axis (Xo)	-0.876 in
Radii of gyration (Ro)	1.729 in
Torsional flexural constant (Beta)	0.743
Unbraced Length (Lu)	22.1 in

ASTM & Code Standards:

- AISI S100-12 & S220-15
- Meets or exceeds ASTM C645 & C754
- ASTM E119, E72 & E90
- Intertek CCRR-0207, LA RR 26019
- ProSTUD complies with the SFIA Code Compliance Certification Program
- Multiple UL® Design Listing including: V438, V450 & U419
- SDS & Product Certification Information available at www.clarkdietrich.com
- U.S. Patent No. 9,010,070

CLASSIFIED C UL US

Notes:

- Calculated properties are based on AISI S100-12, North American Specification for Design of Cold-Formed Steel Structural Members and AISI S220-15, North American Standard for Cold-Formed Steel Framing - Nonstructural Members.
- Effective properties incorporate the strength increase from the cold work of forming as applicable per AISI A7.2.
- Tabulated gross properties, including torsional properties, are based on full-unreduced cross section of the studs, away from punchouts.
- For deflection calculations, use the effective moment of inertia.
- Allowable moment includes cold work of forming.
- Allowable moment is taken as the lowest value based on local or distortional buckling. Distortional buckling strength is based on a k-phi = 0.

- East Coast Punch Pattern: Center of knockouts are 12" from the leading edge then 48" o.c.
- West Coast Punch Pattern: Center of knockouts are 24" from the leading edge then 24" o.c.

Sustainability Credits:
For more details and LEED letters contact Technical Services at 888-437-3244 or visit www.clarkdietrich.com/LEED
LEED v4 MR Credit -- Building Product Disclosure and Optimization: EPD (1 point) - Sourcing of Raw Materials (1 point) - Material Ingredients (1 point) - Construction and Demolition Waste Management (up to 2 points) - Innovation Credit (up to 2 points).
LEED 2009 Credit MR 2 & MR 4 -- ClarkDietrich's steel products are 100% recyclable and have a minimum recycled content of 34.2% (19.8% post-consumer and 14.4% pre-consumer). If seeking a higher number to meet Credit MR 5, please contact us at (info@clarkdietrich.com / 888-437-3244)

Project Information	Contractor Information	Architect Information
Name:	Name:	Name:
Address:	Contact:	Contact:
	Phone:	Phone:
	Fax:	Fax:

CD-PDS © 07/18 ClarkDietrich Building Systems

Product Submittal Sheet

Tech Support: 888-437-3244
Engineering Services: 877-832-3206
Sales: 800-543-7140
clarkdietrich.com

Product category: ProSTUD® 20 LTD Drywall Stud
Product name: **362PDS125-19 65ksi G40 - Punched**
3-5/8" ProSTUD 20 LTD (19mil)

3-5/8" ProSTUD 20 LTD (19mil) Drywall Stud - COMPOSITE Limiting Heights (AC86-2015)

(1 layer) 5/8" Type X Gypsum Board

Spacing	5 psf			7.5 psf			10 psf		
(inches)	L/120	L/240	L/360	L/120	L/240	L/360	L/120	L/240	L/360
12	23'-3"	18'-5"	16'-1"	20'-4"	16'-1"	14'-1"	18'-5"	14'-8"	12'-10"
16	21'-1"	16'-9"	14'-8"	18'-5"	14'-8"	12'-10"	16'-7"f	13'-4"	11'-7"
24	18'-5"	14'-8"	12'-10"	15'-8"f	12'-10"	11'-1"	13'-7"f	11'-7"	9'-11"

Composite Table Notes:

- Allowable composite limiting heights were determined in accordance with ICC-ES AC86-2015.
- Additional composite wall testing and analysis requirements of the SFIA Code Compliance Certification Program were observed.
- In accordance with current building codes and AISI design standards, the 1/3 Stress Increase for strength was not used.
- The composite limiting heights provided in the tables are based on a single layer of type X gypsum board from the following manufacturers: American, CertainTeed, Georgia Pacific, Continental, National, PABCO, and USG.
- The gypsum board must be applied full height in the vertical orientation to each stud flange and installed in accordance with ASTM C754 using minimum No. 6 Type S Drywall screws spaced as listed below:
- Screws spaced a minimum of 16 in on-center to framing members spaced at 16 in or 12 in on-center.
- Screws spaced a minimum of 12 in on-center to framing members spaced at 24 in on-center.
- No fasteners are required for attaching the stud to the track except as detailed in ASTM C754.
- Stud end bearing must be a minimum of 1 inch.
- f: Adjacent to the height value indicates that flexural stress controls the allowable wall height.
- s: Adjacent to the height value indicates that shear/end reaction controls the allowable wall height.

3-5/8" ProSTUD 20 LTD (19mil) Drywall Stud - NON-COMPOSITE Limiting Heights (FULLY BRACED)

Spacing	5 psf			7.5 psf			10 psf		
(inches)	L/120	L/240	L/360	L/120	L/240	L/360	L/120	L/240	L/360
12	18'-10"	14'-11"	13'-0"	16'-5"	13'-0"	11'-5"	14'-5"	11'-10"	10'-4"
16	17'-1"	13'-7"	11'-10"	14'-5"	11'-10"	10'-4"	12'-5"	10'-9"	9'-5"
24	14'-5"	11'-10"	10'-4"	11'-9"	10'-4"	9'-0"	10'-2"	9'-5"	8'-3"

Non-Composite Table Notes:

- Heights are based on AISI S100-12, North American Specification, and AISI S220-15, North American Standard for Cold-Formed Steel Framing - Nonstructural Members, using steel properties alone.
- Above listed Non-Composite Limiting Heights are applicable when the unbraced length is less than or equal to Lu.
- Heights are limited by moment, deflection, shear, and web crippling (assuming 1" end reaction bearing).

Project Information	Contractor Information	Architect Information
Name:	Name:	Name:
Address:	Contact:	Contact:
	Phone:	Phone:
	Fax:	Fax:

CD-PDS-LH © 07/18 ClarkDietrich Building Systems

Product Submittal Sheet

ClarkDietrich BUILDING SYSTEMS

Tech Support: 888-437-3244
Engineering Services: 877-832-3206

Sales: 800-543-7140
clarkdietrich.com

Product category: ProTRAK® 20 Drywall Track 1-1/4" leg
Product name: **362PDT125-19 50ksi G40 - Unpunched**
3-5/8" ProTRAK 20 LTD (19mil)

Coating: G40
Color coding: Brown

09.22.16 (Non-Structural Metal Framing)

* Embossments in web are only placed on sections 2-1/2" and wider.

Geometric Properties

Inside web depth	3.625 in	Weight	0.417 lb/ft
Leg width	1.250 in	Minimum thickness	0.0190 in
Design thickness	0.0200 in		
Yield stress, Fy	50 ksi		

Gross Section Properties of Full Section, Strong Axis

Cross sectional area (A)	0.122 in^2
Moment of inertia (Ix)	0.249 in^4
Radius of gyration (Rx)	1.125 in
Gross moment of inertia (Iy)	0.103 in^4
Gross radius of gyration (Ry)	0.830 in

Effective Section Properties, Strong Axis

Effective area (Ae)	0.032 in^4
Moment of inertia for deflection (Ixe)	0.099 in^4
Section modulus (Sxe)	0.037 in^3
Allowable bending moment (Ma)	1,113 in-lbs
Allowable shear force in web (Vag)	289 lb

Torsional Properties

St. Venant torsion constant (J x 1000)	0.0200 in^4
Warping constant (Cw)	0.121 in^6
Distance from shear center to neutral axis (Xo)	-1.890 in
Radii of gyration (Ro)	2.351 in
Torsional flexural constant (Beta)	0.354

ASTM & Code Standards:

- AISI S100-12 & S220-15
- Meets or exceeds ASTM C645 & C754
- ASTM E119, E72 & E90
- Intertek CCRR-0207, LA RR 26019
- ProSTUD complies with the SFIA Code Compliance Certification Program
- Multiple UL® Design Listing including: V438, V450 & U419
- SDS & Product Certification Information available at www.clarkdietrich.com.
- U.S. Patent No. 9,010,070

CLASSIFIED c UL us

Notes:

- Calculated properties are based on AISI S100-12, North American Specification for Design of Cold-Formed Steel Structural Members and AISI S220-15, North American Standard for Cold-Formed Steel Framing - Nonstructural Members.
- Effective properties incorporate the strength increase from the cold work of forming as applicable per AISI A7.2.
- Tabulated gross properties, including torsional properties, are based on full-unreduced cross section of the tracks.
- For deflection calculations, use the effective moment of inertia.
- Allowable moment includes cold work of forming.
- Allowable moment is taken as the lowest value based on local or distortional buckling. Distortional buckling strength is based on a k-phi = 0.
- Web depth for track sections is equal to the nominal height plus two times the design thickness plus the bend radius. Hems on nonstructural track sections are ignored.

Sustainability Credits:
For more details and LEED letters contact Technical Services at 888-437-3244 or visit www.clarkdietrich.com/LEED
LEED v4 MR Credit -- Building Product Disclosure and Optimization: EPD (1 point) - Sourcing of Raw Materials (1 point) - Material Ingredients (1 point) - Construction and Demolition Waste Management (up to 2 points) - Innovation Credit (up to 2 points).
LEED 2009 Credit MR 2 & MR 4 -- ClarkDietrich's steel products are 100% recyclable and have a minimum recycled content of 34.2% (19.8% post-consumer and 14.4% pre-consumer). If seeking a higher number to meet Credit MR 5, please contact us at (info@clarkdietrich.com / 888-437-3244)

Project Information	Contractor Information	Architect Information
Name:	Name:	Name:
Address:	Contact:	Contact:
	Phone:	Phone:
	Fax:	Fax:

CD-PDT © 07/18 ClarkDietrich Building Systems

Product Submittal Sheet

ClarkDietrich BUILDING SYSTEMS

Tech Support: 888-437-3244
Engineering Services: 877-832-3206

Sales: 800-543-7140
clarkdietrich.com

09.22.16 (Non-Structural Metal Framing)

Product category: ProSTUD® 20 LTD Drywall Stud
Product name: **162PDS125-19 65ksi G40 - Punched**
1-5/8" ProSTUD 20 LTD (19mil)

Coating: G40
Color coding: Brown

* Embossments in web are only placed on sections 2-1/2" and wider.

Geometric Properties

Web depth	1.625 in	Weight	0.305 lb/ft
Flange width	1.250 in	Punchout width	0.750 in
Stiffening lip	0.255 in	Punchout length	1.750 in
Design thickness	0.0200 in	Minimum thickness	0.0190 in
Yield stress, Fy	65 ksi		

Gross Section Properties of Full Section, Strong Axis

Cross sectional area (A)	0.090 in^2
Moment of inertia (Ix)	0.042 in^4
Radius of gyration (Rx)	0.685 in
Gross moment of inertia (Iy)	0.020 in^4
Gross radius of gyration (Ry)	0.466 in

Effective Section Properties, Strong Axis

Effective area (Ae)	0.042 in^2
Moment of inertia for deflection (Ixe)	0.037 in^4
Section modulus (Sxe)	0.031 in^3
Allowable bending moment (Ma)	1,193 in-lbs
Allowable shear force in web (Unpunched) (Vag)	473 lb
Allowable shear force in web (Punched) (Vanet)	165 lb

Torsional Properties

St. Venant torsion constant (J x 1000)	0.0120 in^4
Warping constant (Cw)	0.012 in^6
Distance from shear center to neutral axis (Xo)	-1.096 in
Radii of gyration (Ro)	1.374 in
Torsional flexural constant (Beta)	0.364
Unbraced Length (Lu)	22.0 in

ASTM & Code Standards:

- AISI S100-12 & S220-15
- Meets or exceeds ASTM C645 & C754
- ASTM E119, E72 & E90
- Intertek CCRR-0207, LA RR 26019
- ProSTUD complies with the SFIA Code Compliance Certification Program
- Multiple UL® Design Listing including: V438, V450 & U419
- SDS & Product Certification Information available at www.clarkdietrich.com
- U.S. Patent No. 9,010,070

CLASSIFIED c UL us

Notes:

- Calculated properties are based on AISI S100-12, North American Specification for Design of Cold-Formed Steel Structural Members and AISI S220-15, North American Standard for Cold-Formed Steel Framing - Nonstructural Members.
- Effective properties incorporate the strength increase from the cold work of forming as applicable per AISI A7.2.
- Tabulated gross properties, including torsional properties, are based on full-unreduced cross section of the studs, away from punchouts.
- For deflection calculations, use the effective moment of inertia.
- Allowable moment includes cold work of forming.
- Allowable moment is taken as the lowest value based on local or distortional buckling. Distortional buckling strength is based on a k-phi = 0.

- East Coast Punch Pattern: Center of knockouts are 12" from the leading edge then 48" o.c.
- West Coast Punch Pattern: Center of knockouts are 24" from the leading edge then 24" o.c.

Sustainability Credits:
For more details and LEED letters contact Technical Services at 888-437-3244 or visit www.clarkdietrich.com/LEED
LEED v4 MR Credit – Building Product Disclosure and Optimization: EPD (1 point) - Sourcing of Raw Materials (1 point) - Material Ingredients (1 point) - Construction and Demolition Waste Management (up to 2 points) - Innovation Credit (up to 2 points).
LEED 2009 Credit MR 2 & MR 4 – ClarkDietrich's steel products are 100% recyclable and have a minimum recycled content of 34.2% (19.8% post-consumer and 14.4% pre-consumer). If seeking a higher number to meet Credit MR 5, please contact us at (info@clarkdietrich.com / 888-437-3244)

Project Information	Contractor Information	Architect Information
Name:	Name:	Name:
Address:	Contact:	Contact:
	Phone:	Phone:
	Fax:	Fax:

CD-PDS © 07/18 ClarkDietrich Building Systems

Product Submittal Sheet

ClarkDietrich BUILDING SYSTEMS

Tech Support: 888-437-3244
Engineering Services: 877-832-3206

Sales: 800-543-7140
clarkdietrich.com

Product category: ProSTUD® 20 LTD Drywall Stud
Product name: **162PDS125-19 65ksi G40 - Punched**
1-5/8" ProSTUD 20 LTD (19mil)

1-5/8" ProSTUD 20 LTD (19mil) Drywall Stud - COMPOSITE Limiting Heights (AC86-2015)

(1 layer) 5/8" Type X Gypsum Board

Spacing	5 psf			7.5 psf			10 psf		
(inches)	L/120	L/240	L/360	L/120	L/240	L/360	L/120	L/240	L/360
12	14'-10"	12'-11"	11'-2"	12'-11"	11'-3"	9'-9"	11'-9"	10'-3"	8'-8"
16	13'-5"	11'-8"	10'-1"	11'-9"	10'-3"	8'-8"	10'-8"	9'-2"	-
24	11'-9"	10'-3"	8'-8"	10'-3"	8'-8"	-	9'-2"	-	-

Composite Table Notes:

- Allowable composite limiting heights were determined in accordance with ICC-ES AC86-2015.
- Additional composite wall testing and analysis requirements of the SFIA Code Compliance Certification Program were observed.
- In accordance with current building codes and AISI design standards, the 1/3 Stress Increase for strength was not used.
- The composite limiting heights provided in the tables are based on a single layer of type X gypsum board from the following manufacturers: American, CertainTeed, Georgia Pacific, Continental, National, PABCO, and USG.
- The gypsum board must be applied full height in the vertical orientation to each stud flange and installed in accordance with ASTM C754 using minimum No. 6 Type S Drywall screws spaced as listed below.
- Screws spaced a minimum of 16 in on-center to framing members spaced at 16 in or 12 in on-center.
- Screws spaced a minimum of 12 in on-center to framing members spaced at 24 in on-center.
- No fasteners are required for attaching the stud to the track except as detailed in ASTM C754.
- Stud end bearing must be a minimum of 1 inch.
- f: Adjacent to the height value indicates that flexural stress controls the allowable wall height.
- s: Adjacent to the height value indicates that shear/end reaction controls the allowable wall height.

1-5/8" ProSTUD 20 LTD (19mil) Drywall Stud - NON-COMPOSITE Limiting Heights (FULLY BRACED)

Spacing	5 psf			7.5 psf			10 psf		
(inches)	L/120	L/240	L/360	L/120	L/240	L/360	L/120	L/240	L/360
12	9'-11"	7'-10"	6'-10"	8'-8"	6'-10"	6'-0"	7'-10"	6'-3"	5'-5"
16	9'-0"	7'-2"	6'-3"	7'-10"	6'-3"	5'-5"	7'-2"	5'-8"	4'-11"
24	7'-10"	6'-3"	5'-5"	6'-10"	5'-5"	4'-9"	6'-3"	4'-11"	4'-4"

Non-Composite Table Notes:

- Heights are based on AISI S100-12, North American Specification, and AISI S220-15, North American Standard for Cold-Formed Steel Framing - Nonstructural Members, using steel properties alone.
- Above listed Non-Composite Limiting Heights are applicable when the unbraced length is less than or equal to Lu.
- Heights are limited by moment, deflection, shear, and web crippling (assuming 1" end reaction bearing).

Project Information	Contractor Information	Architect Information
Name:	Name:	Name:
Address:	Contact:	Contact:
	Phone:	Phone:
	Fax:	Fax:

CD-PDS-LH © 07/18 ClarkDietrich Building Systems

Product Submittal Sheet

ClarkDietrich BUILDING SYSTEMS

Tech Support: 888-437-3244
Engineering Services: 877-832-3206

Sales: 800-543-7140
clarkdietrich.com

09.22.16 (Non-Structural Metal Framing)

Product category: ProTRAK® 20 Drywall Track 1-1/4" leg
Product name: **162PDT125-19 50ksi G40 - Unpunched**
1-5/8" ProTRAK 20 LTD (19mil)

Coating: G40
Color coding: Brown

* Embossments in web are only placed on sections 2-1/2" and wider.

Geometric Properties

Inside web depth	1.625 in	Weight	0.280 lb/ft
Leg width	1.250 in	Minimum thickness	0.0190 in
Design thickness	0.0200 in		
Yield stress, Fy	50 ksi		

Gross Section Properties of Full Section, Strong Axis

Cross sectional area (A)	0.082 in^2
Moment of inertia (Ix)	0.043 in^4
Radius of gyration (Rx)	1.039 in
Gross moment of inertia (Iy)	0.016 in^4
Gross radius of gyration (Ry)	0.400 in

Effective Section Properties, Strong Axis

Effective area (Ae)	0.032 in^4
Moment of inertia for deflection (Ixe)	0.078 in^4
Section modulus (Sxe)	0.038 in^3
Allowable bending moment (Ma)	1,136 in-lbs
Allowable shear force in web (Vag)	289 lb

Torsional Properties

St. Venant torsion constant (J x 1000)	0.0133 in^4
Warping constant (Cw)	0.018 in^6
Distance from shear center to neutral axis (Xo)	-0.769 in
Radii of gyration (Ro)	1.353 in
Torsional flexural constant (Beta)	0.677

ASTM & Code Standards:

- AISI S100-12 & S220-15
- Meets or exceeds ASTM C645 & C754
- ASTM E119, E72 & E90
- Intertek CCRR-0207, LA RR 26019
- ProSTUD complies with the SFIA Code Compliance Certification Program
- Multiple UL® Design Listing including: V438, V450 & U419
- SDS & Product Certification Information available at www.clarkdietrich.com.
- U.S. Patent No. 9,010,070

CLASSIFIED C UL US

Notes:

- Calculated properties are based on AISI S100-12, North American Specification for Design of Cold-Formed Steel Structural Members and AISI S220-15, North American Standard for Cold-Formed Steel Framing - Nonstructural Members.
- Effective properties incorporate the strength increase from the cold work of forming as applicable per AISI A7.2.
- Tabulated gross properties, including torsional properties, are based on full-unreduced cross section of the tracks.
- For deflection calculations, use the effective moment of inertia.
- Allowable moment includes cold work of forming.
- Allowable moment is taken as the lowest value based on local or distortional buckling. Distortional buckling strength is based on a k-phi = 0.
- Web depth for track sections is equal to the nominal height plus two times the design thickness plus the bend radius. Hems on nonstructural track sections are ignored.

Sustainability Credits:
For more details and LEED letters contact Technical Services at 888-437-3244 or visit www.clarkdietrich.com/LEED
LEED v4 MR Credit -- Building Product Disclosure and Optimization: EPD (1 point) - Sourcing of Raw Materials (1 point) - Material Ingredients (1 point) - Construction and Demolition Waste Management (up to 2 points) - Innovation Credit (up to 2 points).
LEED 2009 Credit MR 2 & MR 4 -- ClarkDietrich's steel products are 100% recyclable and have a minimum recycled content of 34.2% (19.8% post-consumer and 14.4% pre-consumer). If seeking a higher number to meet Credit MR 5, please contact us at (info@clarkdietrich.com / 888-437-3244)

Project Information	Contractor Information	Architect Information
Name:	Name:	Name:
Address:	Contact:	Contact:
	Phone:	Phone:
	Fax:	Fax:

CD-PDT © 07/18 ClarkDietrich Building Systems

Product Submittal Sheet

ClarkDietrich BUILDING SYSTEMS

Tech Support: 888-437-3244
Engineering Services: 877-832-3206

Sales: 800-543-7140
clarkdietrich.com

Product category: ProSTUD® 20 LTD Drywall Stud
Product name: **400PDS125-19 65ksi G40 - Punched**
4" ProSTUD 20 LTD (19mil)

Coating: G40
Color coding: Brown

09.22.16 (Non-Structural Metal Framing)

* Embossments in web are only placed on sections 2-1/2" and wider.

Geometric Properties

Web depth	4.000 in	Weight	0.476 lb/ft
Flange width	1.250 in	Punchout width	1.500 in
Stiffening lip	0.330 in	Punchout length	2.500 in
Design thickness	0.0200 in	Minimum thickness	0.0190 in
Yield stress, Fy	65 ksi		

Gross Section Properties of Full Section, Strong Axis

Cross sectional area (A)	0.140 in^2
Moment of inertia (Ix)	0.336 in^4
Radius of gyration (Rx)	1.550 in
Gross moment of inertia (Iy)	0.028 in^4
Gross radius of gyration (Ry)	0.451 in

Effective Section Properties, Strong Axis

Effective area (Ae)	0.050 in^2
Moment of inertia for deflection (Ixe)	0.316 in^4
Section modulus (Sxe)	0.091 in^3
Allowable bending moment (Ma)	3,537 in-lbs
Allowable shear force in web (Unpunched) (Vag)	184 lb
Allowable shear force in web (Punched) (Vanet)	184 lb

Torsional Properties

St. Venant torsion constant (J x 1000)	0.0187 in^4
Warping constant (Cw)	0.092 in^6
Distance from shear center to neutral axis (Xo)	-0.851 in
Radii of gyration (Ro)	1.825 in
Torsional flexural constant (Beta)	0.783
Unbraced Length (Lu)	22.2 in

ASTM & Code Standards:

- AISI S100-12 & S220-15
- Meets or exceeds ASTM C645 & C754
- ASTM E119, E72 & E90
- Intertek CCRR-0207, LA RR 26019
- ProSTUD complies with the SFIA Code Compliance Certification Program
- Multiple UL® Design Listing including: V438, V450 & U419
- SDS & Product Certification Information available at www.clarkdietrich.com
- U.S. Patent No. 9,010,070

CLASSIFIED C UL US

Notes:

- Calculated properties are based on AISI S100-12, North American Specification for Design of Cold-Formed Steel Structural Members and AISI S220-15, North American Standard for Cold-Formed Steel Framing - Nonstructural Members.
- Effective properties incorporate the strength increase from the cold work of forming as applicable per AISI A7.2.
- Tabulated gross properties, including torsional properties, are based on full-unreduced cross section of the studs, away from punchouts.
- For deflection calculations, use the effective moment of inertia.
- Allowable moment includes cold work of forming.
- Allowable moment is taken as the lowest value based on local or distortional buckling. Distortional buckling strength is based on a k-phi = 0.

- East Coast Punch Pattern: Center of knockouts are 12" from the leading edge then 48" o.c.
- West Coast Punch Pattern: Center of knockouts are 24" from the leading edge then 24" o.c.

Sustainability Credits:
For more details and LEED letters contact Technical Services at 888-437-3244 or visit www.clarkdietrich.com/LEED
LEED v4 MR Credit – Building Product Disclosure and Optimization: EPD (1 point) - Sourcing of Raw Materials (1 point) - Material Ingredients (1 point) - Construction and Demolition Waste Management (up to 2 points) - Innovation Credit (up to 2 points).
LEED 2009 Credit MR 2 & MR 4 -- ClarkDietrich's steel products are 100% recyclable and have a minimum recycled content of 34.2% (19.8% post-consumer and 14.4% pre-consumer). If seeking a higher number to meet Credit MR 5, please contact us at (info@clarkdietrich.com / 888-437-3244)

Project Information	Contractor Information	Architect Information
Name:	Name:	Name:
Address:	Contact:	Contact:
	Phone:	Phone:
	Fax:	Fax:

CD-PDS © 07/18 ClarkDietrich Building Systems

Product Submittal Sheet

Tech Support: 888-437-3244
Engineering Services: 877-832-3206
Sales: 800-543-7140
clarkdietrich.com

Product category: ProSTUD® 20 LTD Drywall Stud
Product name: **400PDS125-19 65ksi G40 - Punched**
4" ProSTUD 20 LTD (19mil)

4" ProSTUD 20 LTD (19mil) Drywall Stud - COMPOSITE Limiting Heights (AC86-2015)

(1 layer) 5/8" Type X Gypsum Board

Spacing	5 psf			7.5 psf			10 psf		
(inches)	L/120	L/240	L/360	L/120	L/240	L/360	L/120	L/240	L/360
12	24'-4"	20'-2"	17'-9"	21'-3"	17'-8"	15'-6"	19'-4"	16'-0"	14'-1"
16	22'-2"	18'-4"	16'-1"	19'-4"	16'-0"	14'-1"	17'-7"f	14'-7"	12'-9"
24	19'-4"	16'-0"	14'-1"	16'-6"f	14'-0"	12'-4"	14'-4"f	12'-9"	11'-0"

Composite Table Notes:

- Allowable composite limiting heights were determined in accordance with ICC-ES AC86-2015.
- Additional composite wall testing and analysis requirements of the SFIA Code Compliance Certification Program were observed.
- In accordance with current building codes and AISI design standards, the 1/3 Stress Increase for strength was not used.
- The composite limiting heights provided in the tables are based on a single layer of type X gypsum board from the following manufacturers: American, CertainTeed, Georgia Pacific, Continental, National, PABCO, and USG.
- The gypsum board must be applied full height in the vertical orientation to each stud flange and installed in accordance with ASTM C754 using minimum No. 6 Type S Drywall screws spaced as listed below:
- Screws spaced a minimum of 16 in on-center to framing members spaced at 16 in or 12 in on-center.
- Screws spaced a minimum of 12 in on-center to framing members spaced at 24 in on-center.
- No fasteners are required for attaching the stud to the track except as detailed in ASTM C754.
- Stud end bearing must be a minimum of 1 inch.
- f: Adjacent to the height value indicates that flexural stress controls the allowable wall height.
- s: Adjacent to the height value indicates that shear/end reaction controls the allowable wall height.

4" ProSTUD 20 LTD (19mil) Drywall Stud - NON-COMPOSITE Limiting Heights (FULLY BRACED)

Spacing	5 psf			7.5 psf			10 psf		
(inches)	L/120	L/240	L/360	L/120	L/240	L/360	L/120	L/240	L/360
12	20'-3"	16'-1"	14'-0"	17'-8"	14'-0"	12'-3"	15'-4"	12'-9"	11'-2"
16	18'-5"	14'-7"	12'-9"	15'-4"	12'-9"	11'-2"	13'-4"	11'-7"	10'-1"
24	15'-4"	12'-9"	11'-2"	12'-6"	11'-2"	9'-9"	10'-10"	10'-1"	8'-10"

Non-Composite Table Notes:

- Heights are based on AISI S100-12, North American Specification, and AISI S220-15, North American Standard for Cold-Formed Steel Framing - Nonstructural Members, using steel properties alone.
- Above listed Non-Composite Limiting Heights are applicable when the unbraced length is less than or equal to Lu.
- Heights are limited by moment, deflection, shear, and web crippling (assuming 1" end reaction bearing).

Project Information	Contractor Information	Architect Information
Name:	Name:	Name:
Address:	Contact:	Contact:
	Phone:	Phone:
	Fax:	Fax:

CD-PDS-LH © 07/18 ClarkDietrich Building Systems

Product Submittal Sheet

ClarkDietrich BUILDING SYSTEMS

Tech Support: 888-437-3244
Engineering Services: 877-832-3206

Sales: 800-543-7140
clarkdietrich.com

09.22.16 (Non-Structural Metal Framing)

Product category: ProTRAK® 20 Drywall Track 1-1/4" leg
Product name: **400PDT125-19 50ksi G40 - Unpunched**
4" ProTRAK 20 LTD (19mil)

Coating: G40
Color coding: Brown

* Embossments in web are only placed on sections 2-1/2" and wider.

Geometric Properties

Inside web depth	4.000 in	Weight	0.442 lb/ft
Leg width	1.250 in	Minimum thickness	0.0190 in
Design thickness	0.0200 in		
Yield stress, Fy	50 ksi		

Gross Section Properties of Full Section, Strong Axis

Cross sectional area (A)	0.130 in^2
Moment of inertia (Ix)	0.312 in^4
Radius of gyration (Rx)	1.144 in
Gross moment of inertia (Iy)	0.168 in^4
Gross radius of gyration (Ry)	0.995 in

Effective Section Properties, Strong Axis

Effective area (Ae)	0.032 in^4
Moment of inertia for deflection (Ixe)	0.102 in^4
Section modulus (Sxe)	0.037 in^3
Allowable bending moment (Ma)	1,108 in-lbs
Allowable shear force in web (Vag)	289 lb

Torsional Properties

St. Venant torsion constant (J x 1000)	0.0227 in^4
Warping constant (Cw)	0.201 in^6
Distance from shear center to neutral axis (Xo)	-2.360 in
Radii of gyration (Ro)	2.806 in
Torsional flexural constant (Beta)	0.292

ASTM & Code Standards:

- AISI S100-12 & S220-15
- Meets or exceeds ASTM C645 & C754
- ASTM E119, E72 & E90
- Intertek CCRR-0207, LA RR 26019
- ProSTUD complies with the SFIA Code Compliance Certification Program
- Multiple UL® Design Listing including: V438, V450 & U419
- SDS & Product Certification Information available at www.clarkdietrich.com.
- U.S. Patent No. 9,010,070

CLASSIFIED C UL US

Notes:

- Calculated properties are based on AISI S100-12, North American Specification for Design of Cold-Formed Steel Structural Members and AISI S220-15, North American Standard for Cold-Formed Steel Framing - Nonstructural Members.
- Effective properties incorporate the strength increase from the cold work of forming as applicable per AISI A7.2.
- Tabulated gross properties, including torsional properties, are based on full-unreduced cross section of the tracks.
- For deflection calculations, use the effective moment of inertia.
- Allowable moment includes cold work of forming.
- Allowable moment is taken as the lowest value based on local or distortional buckling. Distortional buckling strength is based on a k-phi = 0.
- Web depth for track sections is equal to the nominal height plus two times the design thickness plus the bend radius. Hems on nonstructural track sections are ignored.

Sustainability Credits:
For more details and LEED letters contact Technical Services at 888-437-3244 or visit www.clarkdietrich.com/LEED
LEED v4 MR Credit – Building Product Disclosure and Optimization: EPD (1 point) - Sourcing of Raw Materials (1 point) - Material Ingredients (1 point) - Construction and Demolition Waste Management (up to 2 points) - Innovation Credit (up to 2 points).
LEED 2009 Credit MR 2 & MR 4 -- ClarkDietrich's steel products are 100% recyclable and have a minimum recycled content of 34.2% (19.8% post-consumer and 14.4% pre-consumer). If seeking a higher number to meet Credit MR 5, please contact us at (info@clarkdietrich.com / 888-437-3244)

Project Information	Contractor Information	Architect Information
Name:	Name:	Name:
Address:	Contact:	Contact:
	Phone:	Phone:
	Fax:	Fax:

CD-PDT © 07/18 ClarkDietrich Building Systems

Product Submittal Sheet

ClarkDietrich BUILDING SYSTEMS

Tech Support: 888-437-3244
Engineering Services: 877-832-3206

Sales: 800-543-7140
clarkdietrich.com

Furring / Hat Channel

09.22.16 (Non-Structural Metal Framing)

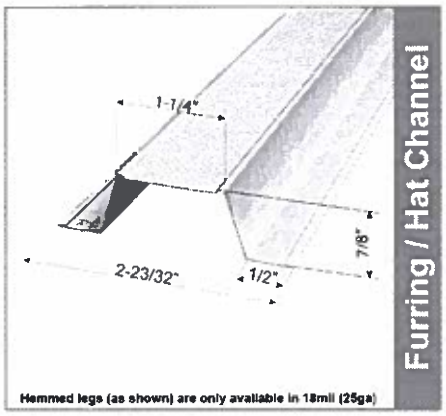

Product category	7/8" Furring / Hat Channel - 20ga DW (30mils)
Product name	087F125-30 (33ksi, G40EQ)
Coating	G40EQ (G40 or G60 available)

Geometric Properties

Depth	0.875 in
Width	1.250 in
Design Thickness	0.0312 in
Min. steel thickness	0.0296 in
Yield stress, Fy	33ksi
Ultimate, Fu	45ksi

Gross Section Properties of Full Section, Strong Axis

Cross sectional area (A)	0.118 in(^2)
Member weight per foot of length	0.401 lb/ft
Moment of inertia (Ix)	0.014 in(^4)
Radius of gyration (Rx)	0.350 in
Gross moment of inerita (Iy)	0.056 in(^4)
Gross radius of gyration (Ry)	0.691 in

Effective Section Properties, Strong Axis

Moment of inertia for deflection (Ix)	0.014 in(^4)
Section modulus (Sx)	0.031 in(^3)
Allowable bending moment (Ma)	50.98 ft/lb
Allowable shear force (Va)	420 lb

Used in framing applications:

- Furring for walls & ceilings
- Furring out masonry walls
- Framing for drop ceilings assemblies

Product Data & Ordering Information:

Stock length	10'-0" and 12'-0" long pieces
Packaging	10 pieces per bundle - 440 pieces per pallet
Packaging weight	41 lbs/bundle

ASTM & Code Standards:

- AISI North American Specification [NASPEC] S100-12
- Non-structural furring is produced to meet or exceed ASTM C645
- Galvanized sheet steel meets or exceeds requirements of ASTM A1003
- For installation & storage information refer to ASTM C754
- SDS & Product Certification Information is available at www.clarkdietrich.com/SupportDocs

Furring / Hat Channel Allowable Ceiling Spans (Deflection: L/360)

Dead Load Hat Spacing o.c.	4 psf 12"	4 psf 16"	4 psf 24"	6 psf 12"	6 psf 16"	6 psf 24"	13 psf 12"	13 psf 16"	13 psf 24"
Single Span	5'-5"	4'-11"	4'-3"	4'-9"	4'-3"	3'-9"	3'-8"	3'-4"	2'-11"
Multiple Span	6'-8"	6'-1"	5'-3"	5'-10"	5'-3"	4'-7"	4'-6"	4'-1"	3'-7"

For more ceiling span tables and table notes see:
https://www.clarkdietrich.com/products/drywall-framing/furring-channel-hat-channel

Sustainability Credits:
For more details and LEED letters contact Technical Services at 888-437-3244 or visit www.clarkdietrich.com/LEED
LEED v4 MR Credit – Building Product Disclosure and Optimization: EPD (1 point) - Sourcing of Raw Materials (1 point) - Material Ingredients (1 point) - Construction and Demolition Waste Management (up to 2 points) - Innovation Credit (up to 2 points).
LEED 2009 Credit MR 2 & MR 4 – ClarkDietrich's steel products are 100% recyclable and have a minimum recycled content of 34.2% (19.8% post-consumer and 14.4% pre-consumer). If seeking a higher number to meet Credit MR 5, please contact us at (info@clarkdietrich.com / 888-437-3244)

087F125-30 © 04/2018 ClarkDietrich Building Systems

Project Information	Contractor Information	Architect Information
Name:	Name:	Name:
Address:	Contact:	Contact:
	Phone:	Phone:
	Fax:	Fax: